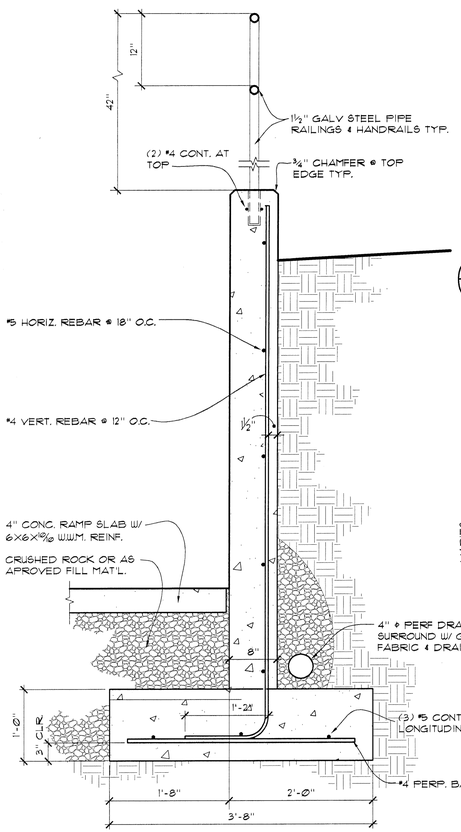

6 A1.2 RETAINING WALL
SCALE: 1" = 1'-0"

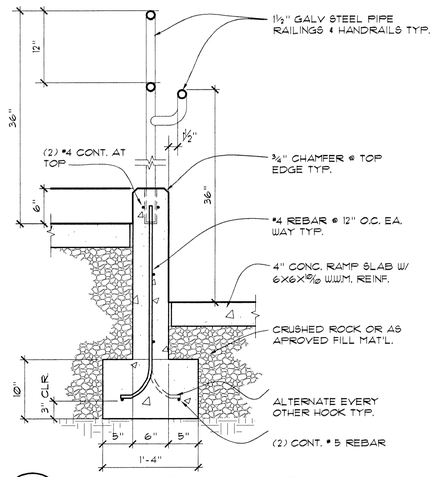

7 A1.2 RAMP FOOTING DETAIL
SCALE: 1" = 1'-0"

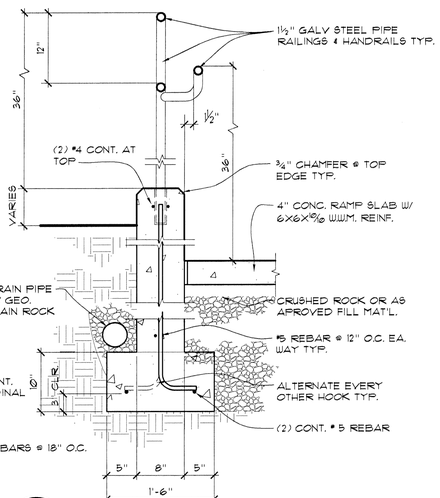

5 A1.2 RAMP FOOTING DETAIL
SCALE: 1" = 1'-0"

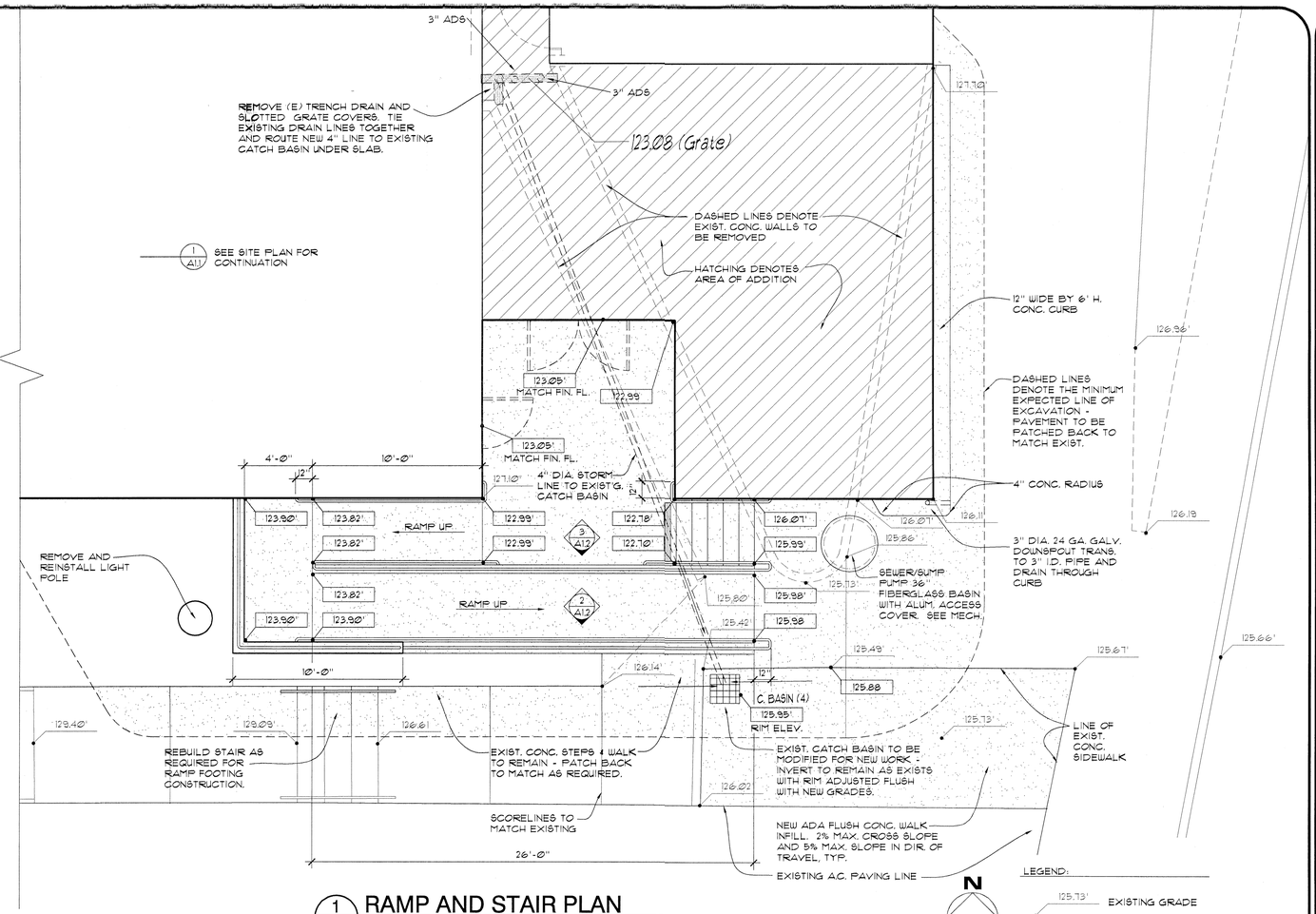

1 A1.2 RAMP AND STAIR PLAN
SCALE: 1/4" = 1'-0"

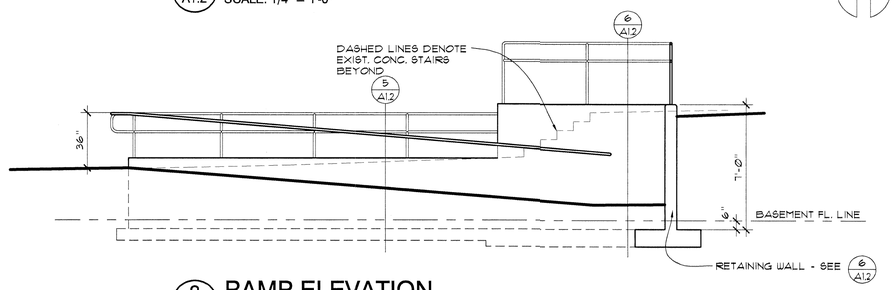

2 A1.2 RAMP ELEVATION
SCALE: 1/4" = 1'-0"

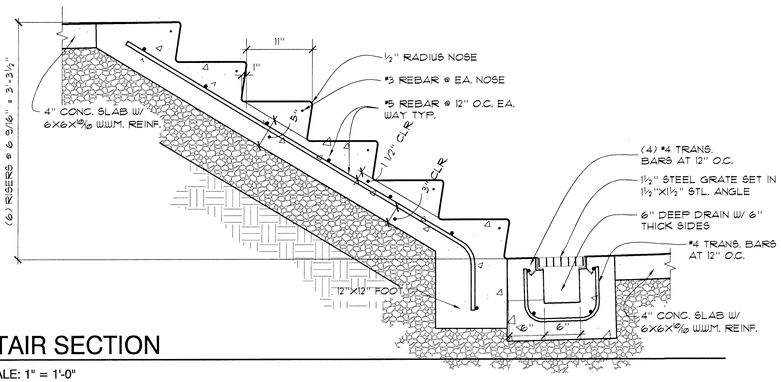

4 A1.2 STAIR SECTION
SCALE: 1" = 1'-0"

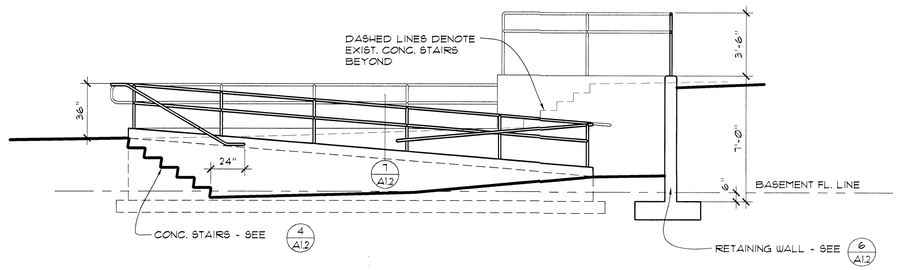

3 A1.2 RAMP ELEVATION
SCALE: 1/4" = 1'-0"

HGE INC
ARCHITECTS, ENGINEERS, SURVEYORS, & PLANNERS
375 Park Avenue/Coos Bay, Oregon 97420 (541) 269-1166
19 N. W. Fifth Avenue/Portland, Oregon 97209 (503) 222-1687

SHEET TITLE: RAMP PLAN and SITE DETAILS

PROJECT: SENIOR CENTER REMODEL
CITY OF NEWPORT
20 SE 2nd STREET, NEWPORT, OREGON

REGISTERED ARCHITECT 2840 JOSEPH A. SLACK COOS BAY, OREGON STATE OF OREGON

PROJECT NO. 08.04

DATE: MARCH 2010

REVISIONS

DATE	BY

DRAWN BY:

SHEET NO. A1.2

FILE No. H:\Architecture\Jobs\08.04 Newport Senior Center Remodel\1 Drawings\Construction Documents\A1.2 Ramp Plans.dwg 04/05/10 17:41 – John Rice